This

Trondheim international school

Established 2004

# Trondheim International School Organizational Chart

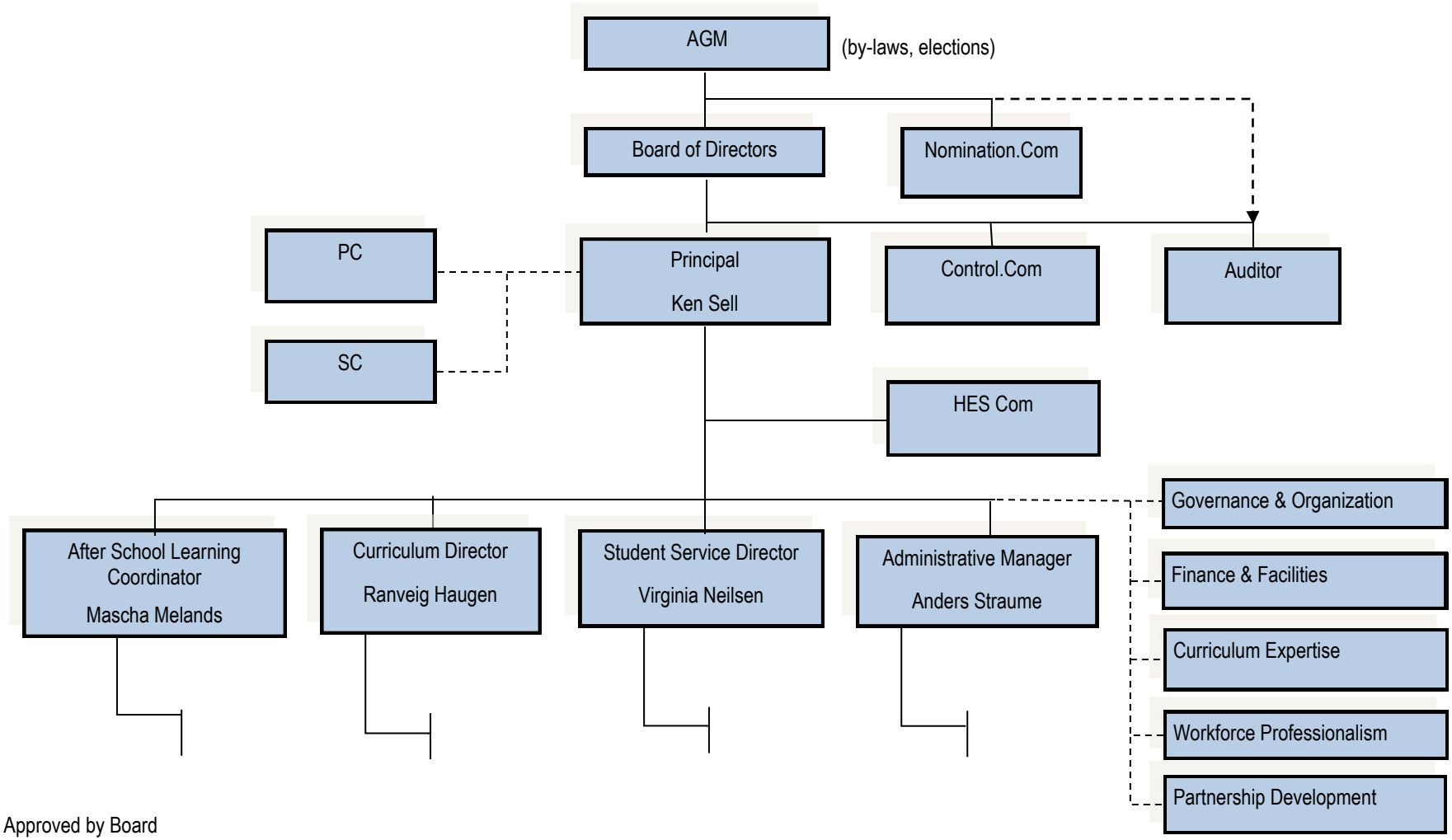


Approved by Board
22.08.2011